Graphic 128x64dots **WG12864G**

Dimension drawing

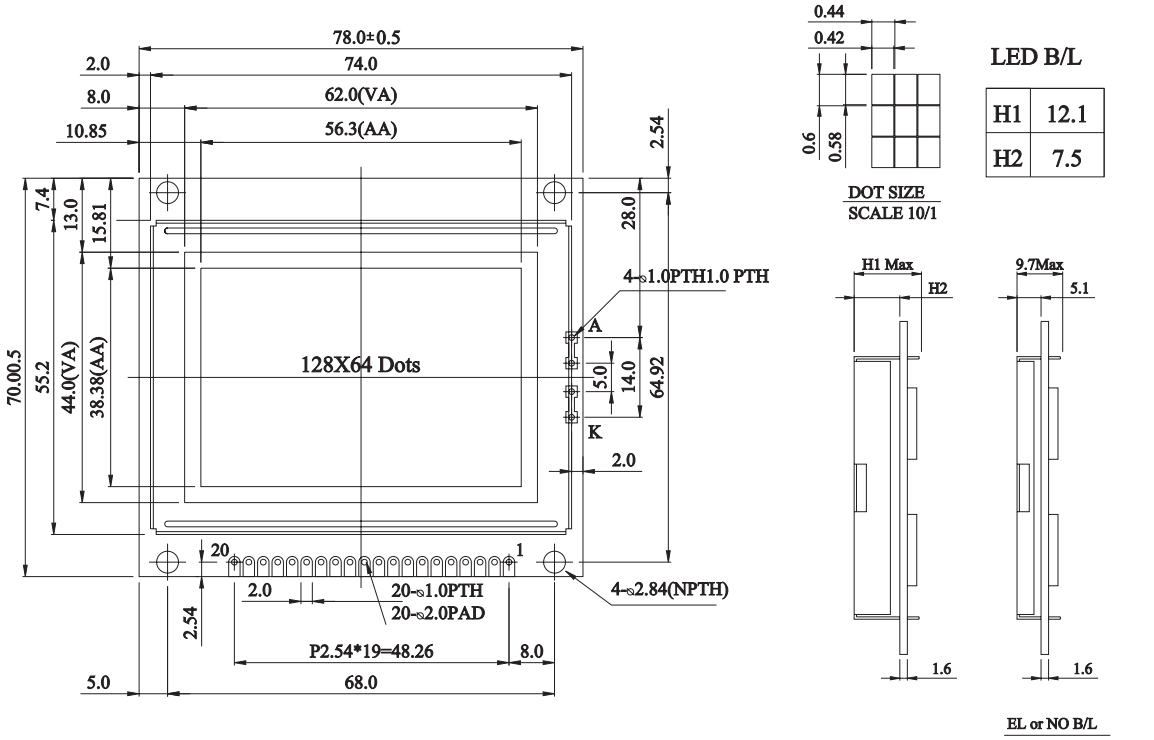

Graphic type

Feature

1. Built-in controller TOSHIBA- (T6963C)
2. +5V power supply
3. 1/64 duty cycle
4. N.V Built-in

Pin NO.	Symbol	Function
1	FG/Vee	Frame Ground/ N/V
2	Vss	Power Supply(0V)
3	Vdd	Power supply (+5V)
4	Vo	Power supply for LCD driver
5	$\overline{WR}$	Data write
6	$\overline{RD}$	Data read
7	$\overline{CE}$	Chip enable
8	$\overline{CD}$	Command/data read/write
9	$\overline{RST}$	Controller reset
10	DB0	Data bus line
11	DB1	Data bus line
12	DB2	Data bus line
13	DB3	Data bus line
14	DB4	Data bus line
15	DB5	Data bus line
16	DB6	Data bus line
17	DB7	Data bus line
18	FS	Font select
19	A	Power supply for LED B/L (+4.2V) RA=0Ω
20	K	Power supply for LED B/L (0V)

Mechanical Data

Item	Standard Value	Unit
Module Dimension	78.0x70.0x12.1	mm
Viewing Area	62.0x44.0	mm
Mounting hole	68.0x 64.9	mm
Dot Pitch	0.44x0.6	mm

Absolute Maximum Rating

Item	Symbol	Standard Value			Unit
		min.	typ.	max.	
Power Supply	VDD-VSS	4.5	5.0	5.5	V
Input Voltage	VI	-0.3	---	VDD	V

Note : VSS=0 Volt, VDD=5.0 Volt.

Electronical Characteristics

Item	Symbol	Condition		Standard Value			Unit
				min.	typ.	max.	
Input Voltage	VDD	L level		$0.7V_{DD}$	---	V_{DD}	V
	VIO	H level		0	---	$0.3V_{DD}$	V
Supply Current	IDD	VDD=5V		---	11.2	11.8	mA
Recommended LC Driving Voltage for Normal Temp. Version module	VDD-V0	-20°C		9.6	10.1	10.6	V
		0°C		9.4	9.9	10.4	
		25°C		9.4	9.6	10.4	
		50°C		8.7	9.2	9.7	
		70°C		8.5	9.0	9.5	
LED Forward Voltage	VF	25°C		---	4.2	---	V
LED Forward Current	IF	25°C	Array Hight	---	480	960	mA
			Array Low	---	140	280	mA
EL Power Supply Current	IEL	Vel=110VAC;400Hz		---	---	5.0	mA

http://www.winstar.com.tw e-mail:winstar@winstar.com.tw
Tel:886-4-24262208 Fax:886-4-24262207